Internal distribution code:

(A) [-] Publication in OJ
(B) [-] To Chairmen and Members
(C) [-] To Chairmen
(D) [X] No distribution

Datasheet for the decision of 1 October 2025

Case Number: T 0769/23 - 3.5.05

Application Number: 14764221.9

Publication Number: 2974084

IPC: H04R3/00, G10L21/0208, G10L21/0232, H04R25/00

Language of the proceedings: EN

Title of invention:
A noise reduction method and system

Patent Proprietor:
Noopl, Inc.

Opponent:
K/S HIMPP

Headword:
Noise reduction in a hearing aid/NOOPL

Relevant legal provisions:
EPC Art. 56, 100(a)
EPC R. 115(2), 129(1)
RPBA 2020 Art. 12(4)

This datasheet is not part of the Decision
It can be changed at any time and without notice

Keywords:
Summons to oral proceedings - notification by public notice - continuation of proceedings without duly summoned party
Inventive step - main request and auxiliary requests 1 to 4 (no): no credible technical effect over the whole scope claimed
Admittance of claim requests filed on appeal - auxiliary requests 5, 6 and 3A to 6A (no): admittance contrary to the need for procedural economy

Decisions cited:
T 1179/16, T 0287/23, T 1465/23

Catchword:
As to the concept of "teaching away" when applying the problem-solution approach, see point 3.3 of the Reasons.

This datasheet is not part of the Decisior
It can be changed at any time and without notic

Europäisches Patentamt
European Patent Office
Office européen des brevets

Beschwerdekammern

Boards of Appeal

Chambres de recours

Boards of Appeal of the
European Patent Office
Richard-Reitzner-Allee 8
85540 Haar
GERMANY
Tel. +49 (0)89 2399-0

Case Number: T 0769/23 - 3.5.05

D E C I S I O N
of Technical Board of Appeal 3.5.05
of 1 October 2025

Appellant: (Opponent)	K/S HIMPP Nymoellevej 6 3540 Lynge (DK)
Representative:	Meissner Bolte Partnerschaft mbB Patentanwälte Rechtsanwälte Postfach 86 06 24 81633 München (DE)
Respondent: (Patent Proprietor)	Noopl, Inc. 1210 G St, Suite B, Sacramento, CA 95814 (US)
Decision under appeal:	**Decision of the Opposition Division of the European Patent Office posted on 17 February 2023 rejecting the opposition filed against European patent No. 2974084 pursuant to Article 101(2) EPC.**

Composition of the Board:

Chair	K. Bengi-Akyürek
Members:	K. Peirs
	C. Heath

Summary of Facts and Submissions

I. The appeal lies from the decision of the opposition division to reject the opposition (Article 101(2) EPC). The opposition division considered that the ground for opposition under Article 100(a) EPC in conjunction with Articles 54 and 56 EPC did not prejudice the maintenance of the opposed patent as granted.

In the appealed decision, the opposition division took into account the following prior-art document:

D2: US 2012/0207325 Al.

II. Oral proceedings before the board were held on 1 October 2025.

- The appellant (opponent) requests that the decision under appeal be set aside and that the patent be revoked.

- The respondent (proprietor) was not present at the oral proceedings. It requested in writing, as its **main request**, that the appeal be dismissed. In the alternative, it requested that the patent be maintained in amended form on the basis of one of ten auxiliary requests (auxiliary requests 1 to 6 and auxiliary requests 3A to 6A):

  - **Auxiliary requests 1 to 4** were filed for the first time in the opposition proceedings with the written reply to the notice of opposition, i.e. within the time period under Rule 79(1) EPC, and were re-filed in these appeal proceedings with the written reply to the statement of grounds of

appeal.

- **Auxiliary requests 5, 6 and 3A to 6A** were filed for the first time in the appeal proceedings with the written reply to the statement of grounds of appeal.

At the end of the oral proceedings, the board's decision was announced.

III. Claim 1 of the **main request** reads as follows (board's feature labelling):

(a) "A noise reduction method for reducing unwanted sounds in signals ($X_L(k)$, $X_R(k)$) received from an arrangement of microphones (101, 102) including the steps of:
(b) sensing sound sources distributed around a specified target direction by way of an arrangement of microphones to produce left and right microphone output signals;
(c) determining the magnitude or power of the left and right microphone signals;
(d) attenuating the signals based on the difference of the magnitudes or powers or values derived from the magnitudes or powers of the left and right microphone signals;
and characterised in that:
(e) the step of attenuating the signals further includes determining the attenuation of selected frequencies based on the magnitude or power of the difference between the left and right microphone signals or a value derived from the magnitude or power of the difference between the left and right microphone signals."

IV. Claim 1 of **auxiliary request 1** differs from claim 1 of the main request in that it comprises, at the end, the following feature (board's feature labelling):

(f) "; wherein the said selected frequencies are low frequencies".

V. Claim 1 of **auxiliary request 2** differs from claim 1 of the main request in that feature (a) is replaced by the following feature (board's feature labelling and underlining, the latter reflecting amendments vis-à-vis feature (a)):

(g) "A noise reduction method for reducing unwanted sounds in signals ($X_L(k)$, $X_R(k)$) received from an arrangement of microphones (101, 102) <u>in an acoustic system with at least one microphone located at each of the left and right sides of a head,</u> including the steps of:"

VI. Claim 1 of **auxiliary request 3** comprises, in this order, features (g), (h), (c), (i) and (j), with features (h) to (j) being defined as (board's feature labelling and highlighting, the latter reflecting amendments vis-à-vis features (b), (d) and (e) respectively):

(h) "sensing sound sources distributed around a specified target direction by way of an arrangement of microphones to produce left and right microphone output signals <u>including high frequency signals and low frequency signals, wherein the boundary between high and low frequencies is from 500Hz to 2500Hz</u>;"

(i) "attenuating the signals <u>for the high frequency signals and low frequency signals</u> based on the difference of the magnitudes or powers or values

derived from the magnitudes or powers of the left and right microphone signals;
and characterised in that:";

(j) "the step of attenuating the signals further includes determining the attenuation of ~~selected frequencies~~ the low frequency signals based on the magnitude or power of the difference between the left and right microphone signals or a value derived from the magnitude or power of the difference between the left and right microphone signals."

VII. Claim 1 of **auxiliary request 4** differs from claim 1 of auxiliary request 3 in that feature (j) is replaced by the following feature (board's feature labelling):

(k) "the step of attenuating the high frequency signals and low frequency signals is based on an attenuation value:

$$1 - (P_{DIF}/P_{SUM})$$

and the step of attenuating the signals further includes determining the attenuation of the low frequency signals based on an attenuation value:

$$1 - (P_{SUM} \times (P_{DIF} + V_{DIF}) - (P_{DIF} \times V_{DIF})) / (P_{SUM} \times P_{SUM})$$

where P_{SUM} is the sum of the powers of the left and right microphone signals, P_{DIF} is difference between the powers of the left and right microphone signals and V_{DIF} is the power of the vector difference between the left and right microphone signals."

VIII. Claim 1 of **auxiliary request 5** differs from claim 1 of auxiliary request 4 in that feature (k) is replaced by the following feature (board's feature labelling and underlining, the latter reflecting amendments vis-à-vis feature (k)):

(l) "the step of attenuating the high frequency signals and low frequency signals is based on an attenuation value:

$$1 - (P_{DIF}/P_{SUM})$$

and the step of attenuating the signals further includes determining the attenuation of the low frequency signals based on an attenuation value:

$$1 - (P_{SUM} \times (P_{DIF} + V_{DIF}) - (P_{DIF} \times V_{DIF})) / (P_{SUM} \times P_{SUM})$$

where P_{SUM} is the sum of the powers of the left and right microphone signals, P_{DIF} is difference between the powers of the left and right microphone signals and V_{DIF} is the power of the <u>complex</u> vector difference between the left and right microphone signals<u>, and where the attenuation is time-averaged</u>."

IX. Claim 1 of **auxiliary request 6** differs from claim 1 of auxiliary request 5 in that feature (l) is replaced by the following feature (board's feature labelling and highlighting, the latter reflecting amendments vis-à-vis feature (l)):

(m) "the step of attenuating the <u>signals includes calculating the attenuation of the</u> high frequency signals ~~and low frequency signals is based on an~~

~~attenuation value~~ as:

$a(k) = 1 - (P_{DIF}/P_{SUM})$

and the step of attenuating the signals further includes determining the attenuation of the low frequency signals ~~based on an attenuation value~~ as:

$a(k) = 1 - (P_{SUM} \times (P_{DIF} + V_{DIF}) - (P_{DIF} \times V_{DIF})) / (P_{SUM} \times P_{SUM})$

where k denotes the kth frequency channel, P_{SUM} is the sum of the powers of the left and right microphone signals, P_{DIF} is difference between the powers of the left and right microphone signals and V_{DIF} is the power of the complex vector difference between the left and right microphone signals, and where the attenuation is time-averaged."

X. Claim 1 of **auxiliary requests 3A to 6A** (i.e. the "A"-series of the auxiliary requests, as the board will refer to in point 5.3.4 below) differs from claim 1 of auxiliary requests 3 to 6 respectively in that feature (h) is replaced by the following feature (board's feature labelling and highlighting, the latter reflecting amendments vis-à-vis feature (h)):

(n) "sensing sound sources distributed around a specified target direction by way of an arrangement of microphones to produce left and right microphone output signals including high frequency signals and low frequency signals, wherein the boundary between high and low frequency~~ies~~ signals is ~~from~~ in the range between 500Hz ~~to~~ and 2500Hz;"

Reasons for the Decision

1. *Oral proceedings in the respondent's absence*

1.1 The respondent did not attend the oral proceedings before the board (cf. point II above).

1.2 The board verified that the respondent had been duly summoned under Rule 115(1) EPC. The board observes in this regard that the notification of the summons was effected by public notice under Rule 129 EPC in the European Patent Bulletin 22/2024 of 30 October 2024, page 5272, section III.2 (21) under (application) number 14764221.9. It deems such a notification to have been justified given that the notification including form 2502B dated 22 April 2024 was returned twice, on 28 June 2024 and on 22 August 2024, and that no other address of the proprietor is known.

1.3 Therefore, in accordance with Rule 115(2) EPC and Article 15(3) RPBA, the oral proceedings were held as scheduled in the absence of the duly summoned respondent.

2. *Technical background*

2.1 The opposed patent concerns the field of digital-signal processing for noise reduction, particularly in hearing devices such as hearing aids. In such devices, the primary goal is to improve the intelligibility of a desired sound source (such as speech) by reducing unwanted background noise, thereby increasing the signal-to-noise ratio (SNR) for the wearer.

2.2 The patent's background section criticises prior-art noise-reduction systems that rely on adaptive filters.

According to the patent, these systems often depend on reference signals to estimate the noise, but these estimates could be inaccurate, particularly in low SNR environments. Such inaccuracies are said to lead to inappropriate filtering and distortion of the desired target signal. The patent therefore identifies a need for an improved noise-reduction method that does not rely on such error-prone reference signals.

2.3 The opposed patent proposes a solution that avoids the need for an explicit noise-reference signal by using the inherent spatial properties of sound arriving at a pair of microphones (e.g. one on each side of a user's head). The method is based on the assumption that a desired target signal arrives from the front (and is thus highly correlated between the two microphones), while noise arrives from other directions (and is thus less correlated).

The core of the patented method is the combined use of two distinct metrics to identify and attenuate noise:

- Difference of powers (P_{DIF}), i.e. the absolute difference between the power of the left and right microphone signals ($|P_L - P_R|$). This is effective for identifying noise at higher frequencies where the so-called "head-shadow effect" creates significant power differences for sounds not coming from the front.

- Power of the difference (V_{DIF}), i.e. the power of the vector difference between the left and right signals ($|X_L - X_R|^2$). This metric is sensitive to phase differences caused by different arrival times and is particularly effective for identifying noise at low frequencies where power differences are less

reliable.

By using these two spatially-derived metrics, the system can, according to the patent, distinguish noise from the target signal without needing a pre-defined reference.

2.4 Figure 2 of the opposed patent is the most illustrative embodiment as it depicts the combination of the two metrics mentioned in point 2.3 above:

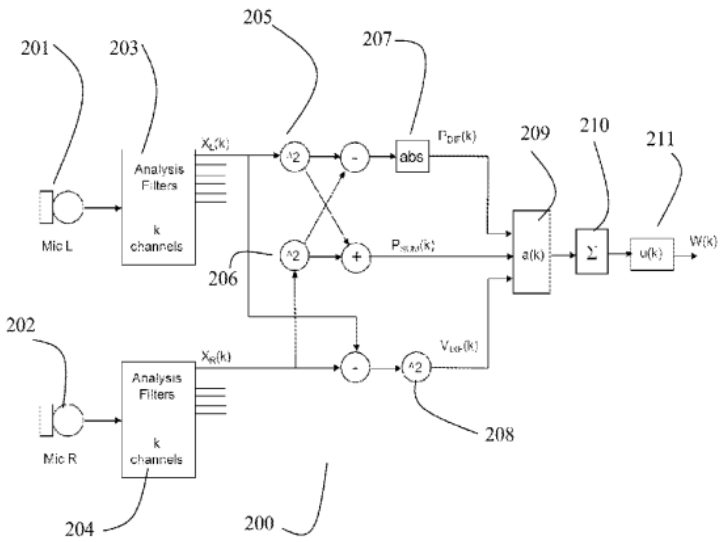

Fig 2

Its operation is as follows. Left (201) and right (202) microphone signals are converted into frequency channels (203, 204). The system then calculates three key values: the sum of the powers (P_{SUM}) (206), the difference of the powers (P_{DIF}) (205, 207) and the power of the vector difference (V_{DIF}) (208). A calculation block (209) determines a preliminary attenuation value *a(k)* using different formulas for high and low frequency bands. For high frequencies, it relies on P_{DIF} and P_{SUM}. For low frequencies, it incorporates all three values — P_{DIF}, P_{SUM} and V_{DIF} — to provide more effective attenuation where phase

differences are a more reliable cue for noise. This preliminary attenuation value is then processed (210, 211) to generate the final filter weights *W(k)*.

3. *Main request: claim 1 – inventive step*

3.1 The board concurs with Reasons 4.1 of the appealed decision and the parties that document **D2** is a suitable starting point for assessing inventive step. As set out in Reasons 4.2.1 of that decision, D2 directly and unambiguously discloses **features (a) to (d)** of claim 1. The subject-matter of claim 1 therefore differs from D2 in **feature (e)**.

3.2 The respondent submitted that feature (e) provided the technical effect of an improved signal-to-noise ratio.

However, the board is not convinced that this alleged effect is credibly achieved over the whole scope of claim 1. This finding is based on fundamental ambiguities in the claim language which prevent the skilled reader from objectively deriving a technical function for feature (e). In particular, claim 1 as granted is silent as to the purpose of the "determining" step - whether explicitly or implicitly. The claim only requires that an attenuation value be *determined*; it does not require this value to be *applied* in a way that would have any technical impact on the method's operation. Without any requirement for this value to be used in a technical feedback loop, the "determining" step could well serve, for example, a *non-technical* purpose, such as the mere logging or displaying of a value for a user's information, without any functional impact on the noise-reduction process itself. Consequently, the board finds that feature (e) does not produce a credible technical effect over the

whole scope of the claim. It must therefore be regarded as a non-functional modification of the disclosure in document D2 (see, for example, also **T 287/23**, Reasons 2.8.2).

3.3 The absence of a credible technical effect over the whole range claimed has direct consequences for the application of the well-established problem-solution approach in the assessment of inventive step. The board acknowledges that the case law has developed two main approaches for assessing inventive step in such situations. The first approach, seen in decisions such as **T 1179/16** (Reasons 3.4.4) and applied by the opposition division in the present case (cf. Reasons 4.2.4, 4.3.2 and 4.3.3 of the appealed decision), is to formulate the objective technical problem as "providing an alternative" (i.e. "how to provide an alternative noise reduction method" here).

However, the board considers this approach problematic, at least in the present case, particularly as it can lead to paradoxical outcomes. The "teaching away" exception mentioned in Reasons 3.4.4 of **T 1179/16**, which was a point of contention between the parties, presupposes a *technical*, i.e. *functional*, reason for avoiding a feature. Yet, this creates a logical inconsistency if the feature itself has been determined to genuinely have no technical effect. In the board's view, the "teaching away" concept, when assessing inventive step under Article 56 EPC, must rather be based on *technical* reasons, but a feature that is truly non-functional cannot be the subject of a technical "teaching away". The board therefore holds that a distinction must be made between "functional alternatives" and "non-functional modifications". The formulation of the objective technical problem as

"providing an alternative" is only appropriate for the former. For the latter, a different approach is warranted. In line with its established jurisprudence (see e.g. **T 1465/23**, Reasons 2.7 and 3.3.3), the board finds that where distinguishing features constitute *non-functional* modifications, the problem-solution approach can be concluded without the formulation of an (artificial) objective technical problem. Accordingly, an arbitrary and non-functional modification of the prior art cannot support an inventive step.

3.4 Applying this latter approach to the present case, the board concludes that feature (e) is a *non-functional* modification of the system of D2. Consequently, it cannot contribute to an inventive step.

3.5 The subject-matter of claim 1 of the main request therefore does not involve an inventive step (Article 56 EPC). Hence, the ground for opposition under Article 100(a) EPC prejudices the maintenance of the patent as granted.

4. *Auxiliary requests 1 to 4: claim 1 - inventive step*

4.1 The amendments underlying auxiliary requests 1 to 4, i.e. **features (f) to (k)**, fail to overcome the objection raised in point 2 above against the main request. This is because none of the added features provides a remedy for the fact that the characterising part of claim 1 defines a *non-functional* modification of the prior art.

4.2 Specifically, feature (f), which limits the "selected frequencies" to "low frequencies", does not address the core deficiency: instead, claim 1 of auxiliary request 1 remains silent as to the purpose of the

"determining" step and thus still fails to define a credible technical effect.

4.3 The further amendments underlying auxiliary requests 2 and 3 do not add any inventive contribution. In particular regarding **features (g) to (i)**, the board notes that D2 (see e.g. paragraphs [0003], [0004] and [0021]) relates to headsets for communication. Such headsets typically operate on signals from microphones placed on a user's head, which signals inherently must contain frequencies falling within the claimed range. Furthermore, in relation to **feature (j)**, claim 1 of auxiliary request 3 also fails to specify - expressly or by implication - any technical purpose for the "determining" step.

4.4 Moreover, auxiliary request 4, by virtue of **feature (k)**, merely recites an obvious implementation. The reason is that the skilled person would have immediately recognised that this formula can be derived from Equation (1) of D2 through a routine-design choice, particularly as D2 (paragraph [0025]) itself suggests using a power of "2" for the magnitudes in that equation. This request also leaves the purpose of the subsequent "determining" step for low-frequency signals undefined.

4.5 Consequently, as none of the amendments overcome the lack of a credible technical effect, the subject-matter of claim 1 of each of auxiliary requests 1 to 4 does not involve an inventive step (Article 56 EPC).

5. *Auxiliary requests 5, 6 and 3A to 6A: admittance*

5.1 The respondent acknowledged that **auxiliary requests 5, 6 and 3A to 6A**, filed for the first time with its

written reply to the statement of grounds of appeal, constitute an "amendment" to its case. These requests may therefore only be admitted into the proceedings at the board's discretion (Article 12(4), second sentence, RPBA).

5.2 The appellant requested that these late-filed requests not be admitted, arguing that they were not suitable to address the outstanding objections. The board, in exercising its discretion, decided not to admit these claim requests. This decision is based on the finding that the amendments are, *prima facie*, not capable of overcoming the fundamental lack of inventive step, and their admittance would therefore run counter to the need for procedural economy (Article 12(4), fifth sentence, RPBA).

5.3 This finding applies to all auxiliary requests 5, 6 and 3A to 6A as they all suffer from the same incurable deficiencies:

5.3.1 First, the fundamental flaw of a non-functional characterising part persists. Claim 1 of **auxiliary request 5**, for instance, requires the determination of attenuation based on specific formulas but fails to establish a necessary technical application for these determined values.

5.3.2 Likewise, claim 1 of **auxiliary request 6** requires the calculation of these formulas but also does not explicitly require that these values are subsequently used to technically effect the attenuation. In both cases, the characterising part of claim 1 remains without a credible technical function.

5.3.3 Second, even if such an application were to be implied, the added features do not establish an inventive step (Article 56 EPC). The introduction of specific formulas (as in auxiliary requests 5 and 6) or the requirements for "time-averaging" and a "complex vector difference" represent either elements of the skilled person's common general knowledge or obvious, routine-design choices. The mathematical framework indicated in D2, particularly its Equation (1) in paragraph [0022], provides a clear basis from which the skilled person would have readily derived such frequency-specific formulas without exercising an inventive step.

5.3.4 Furthermore, the minor linguistic change in the "A-series" of the present auxiliary requests (cf. point X above) does not alter the technical substance of the associated claims.

5.4 The board therefore decided not to admit auxiliary requests 5, 6 and 3A to 6A into the appeal proceedings (Article 12(4) RPBA).

Order

For these reasons it is decided that:

1. The decision under appeal is set aside.

2. The patent is revoked.

The Registrar: The Chair:

B. Brückner K. Bengi-Akyürek

Decision electronically authenticated